Unit: mm

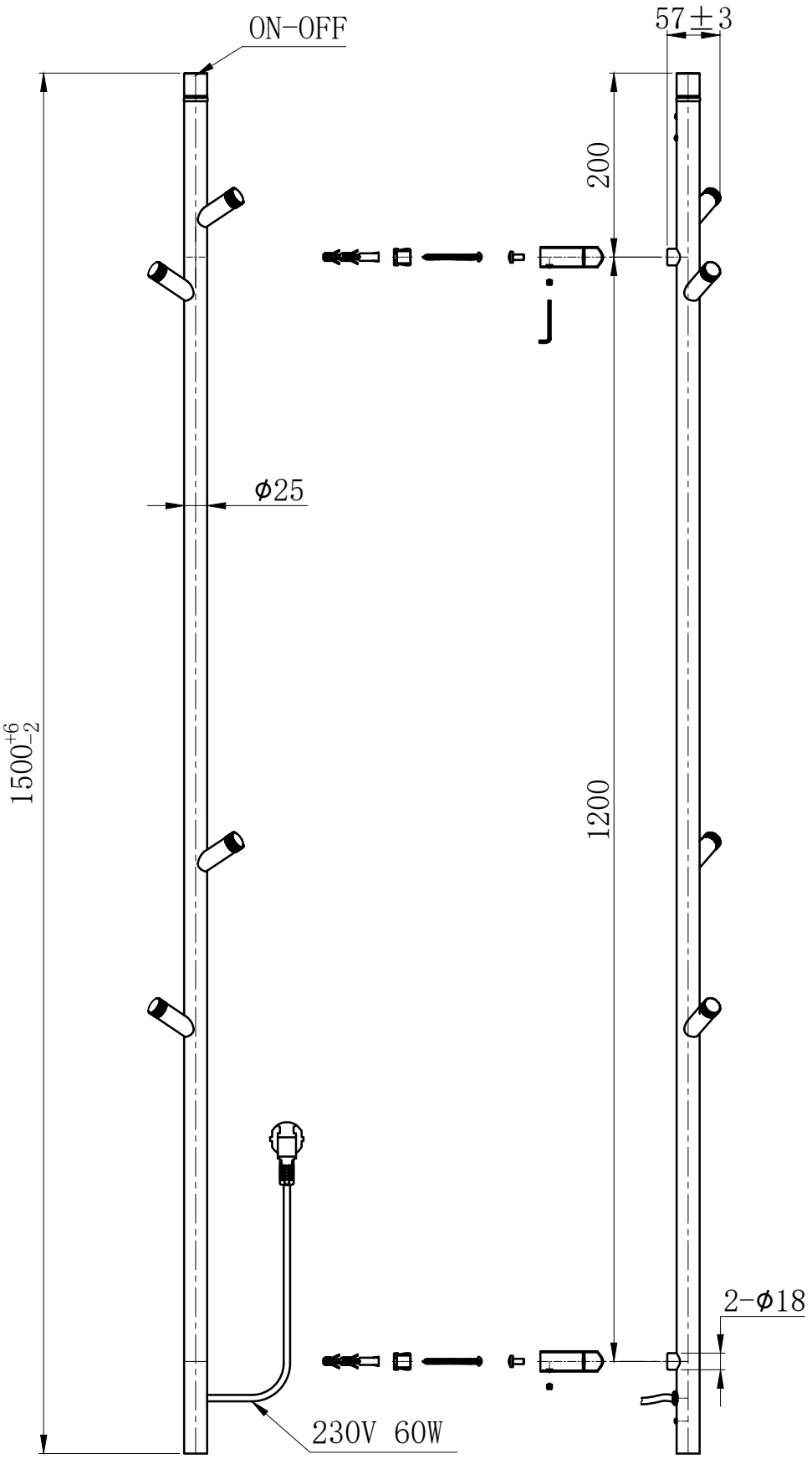
ON-OFF
57±3
200
ϕ25
1500+6-2
1200
2-ϕ18
230V 60W

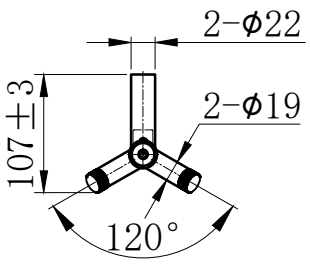
2-ϕ22
107±3
2-ϕ19
120°